DR ZABER SENTRY

Console-sized Gaming PC Case

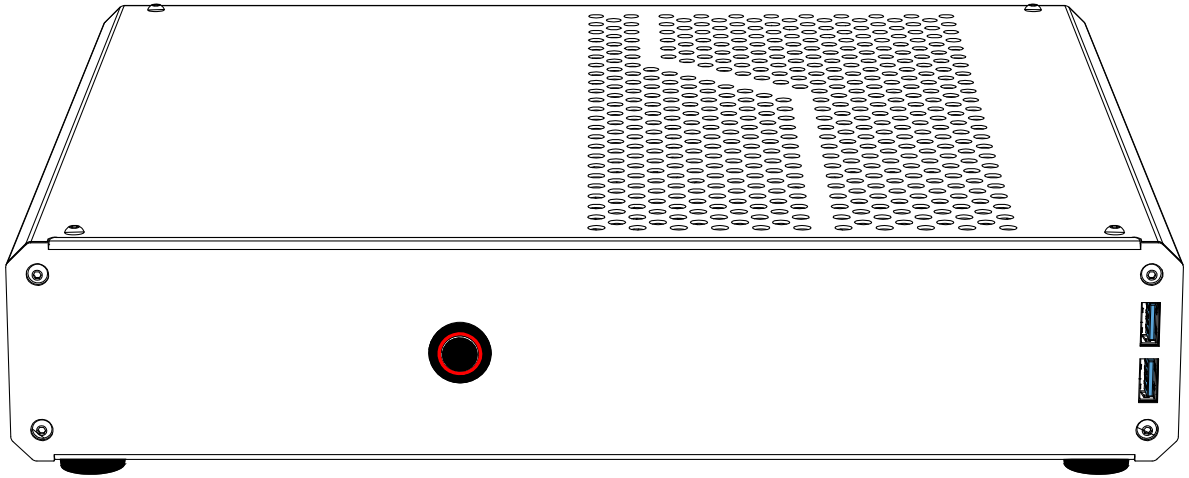

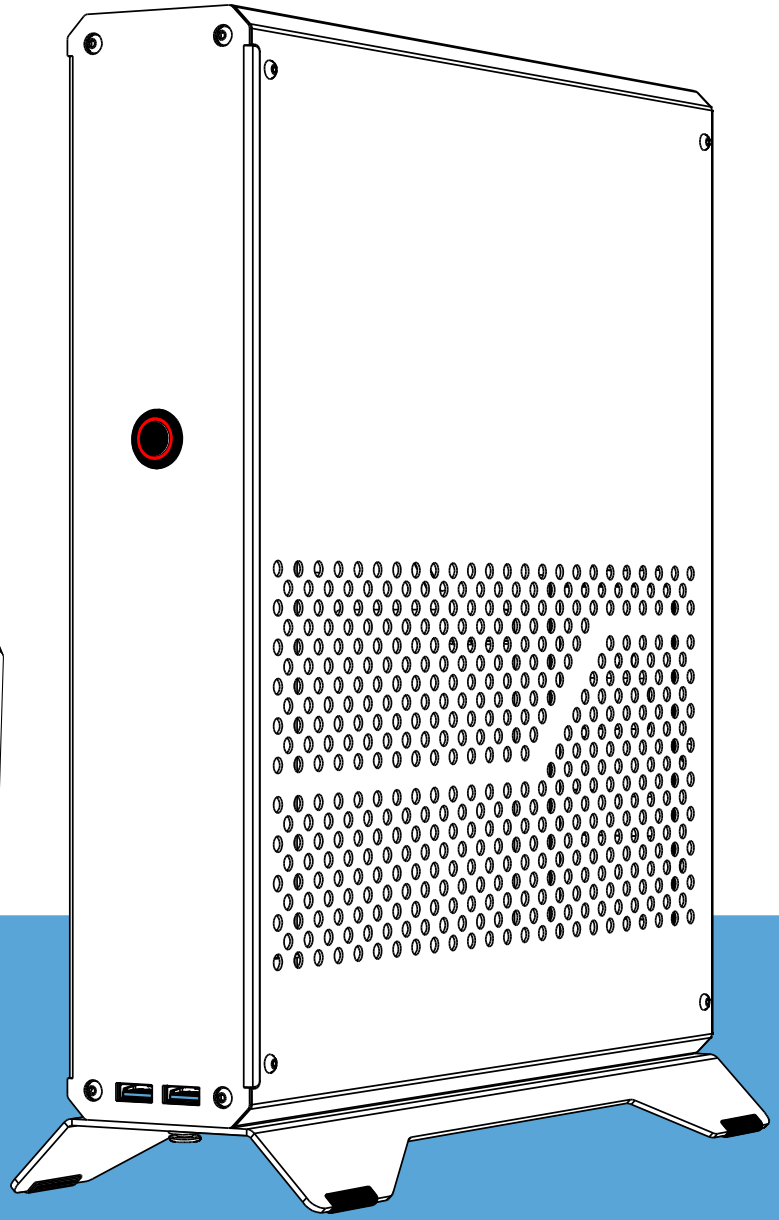

User manual

Dear User

Thank You for your interest in Sentry PC case. We hope you will enjoy using our product.

Sentry is a product directed to the tech-savvy customers and as such requires prior knowledge and understanding of its principles, even before ordering parts for a computer assembled in it.

Sentry targets ATX (mITX/SFX) and PCI-E compliant components for their attainability, however not all components (especially GPU's) on the market follow the ATX and PCI-E specifications mechanical references, making it impossible to fit all of them inside such small form factor chassis.

Please read the following instructions before your first attempt to build inside Sentry. If you are missing any parts or have other issues with the case, please contact us at sentry@zaber.com.pl.

Sentry Team

Package contains small elements that are not safe for small children and pets.

Package contains bags that pose risk of choking for small children and pets.

Assemble the product and keep the leftover accessories away from small children and pets

Assembled device including internal computer components has significant weight reaching 7KG. Never position the device where it poses a risk of falling on someone.

In transportation always put the bag with device on the vehicle floor because in event of rapid breaking or collision such heavy rigid object may become a deadly projectile.

Children should not carry this device in a backpack.

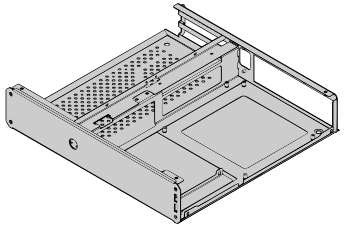

1 X

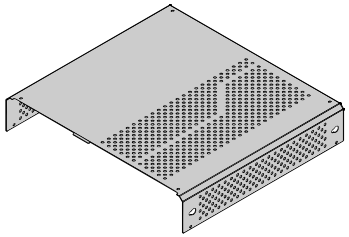

1 X

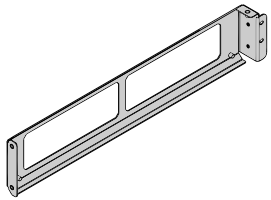

1 X

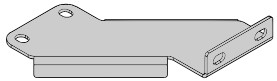

1 X

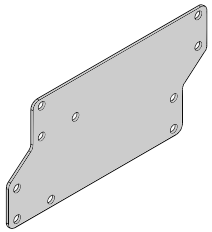

2 X

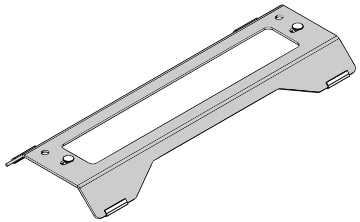

1 X

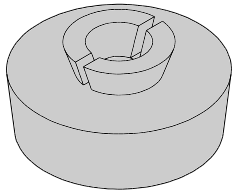

4 X

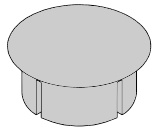

4 X

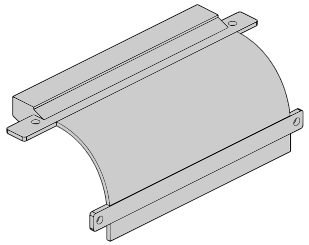

1 X

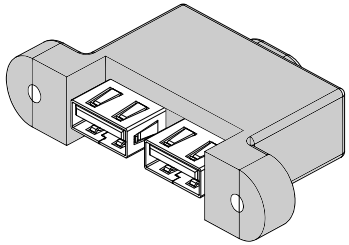

1 X

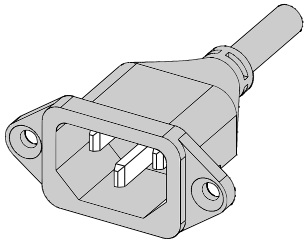

1 X

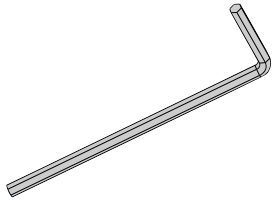

1 X

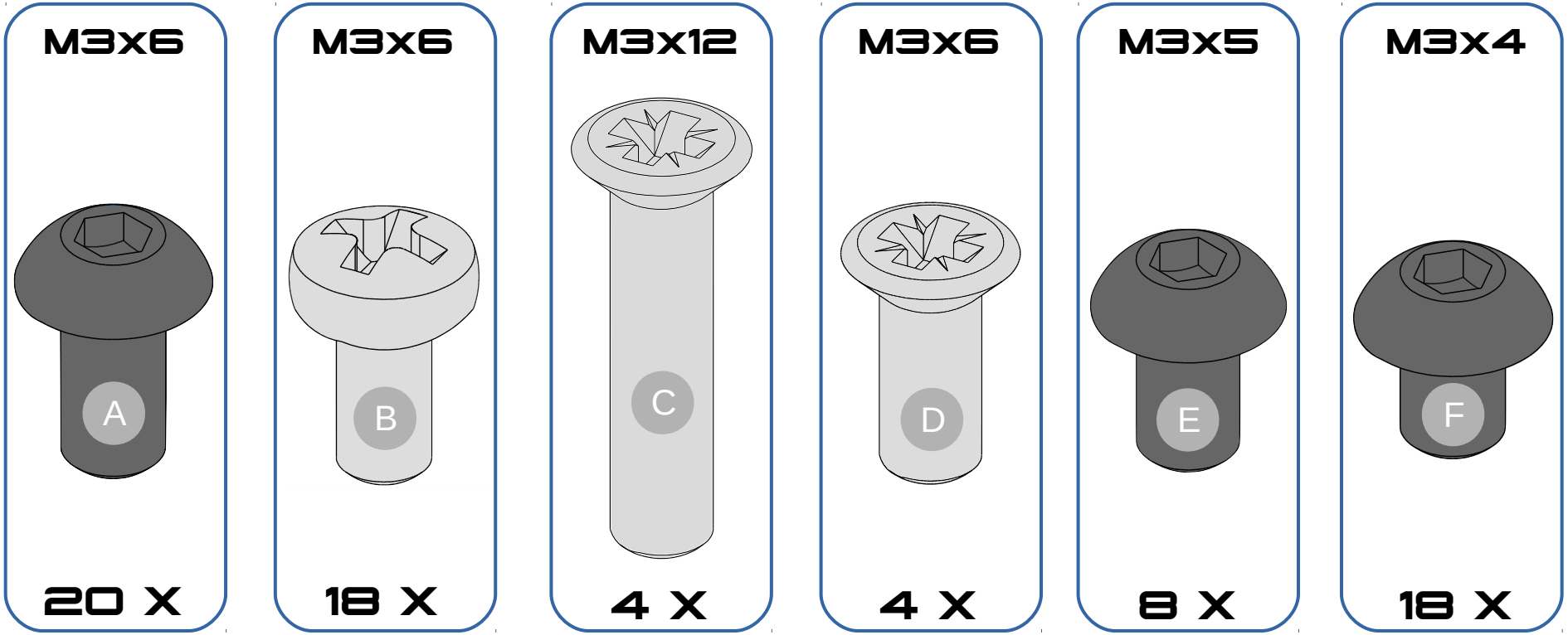
M3x6
A
20 X
M3x6
B
18 X
M3x12
C
4 X
M3x6
D
4 X
M3x5
E
8 X
M3x4
F
18 X

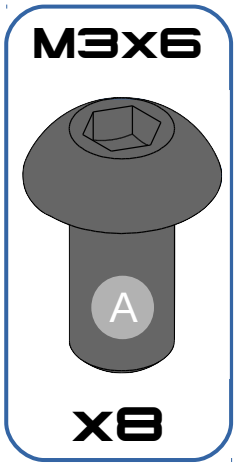

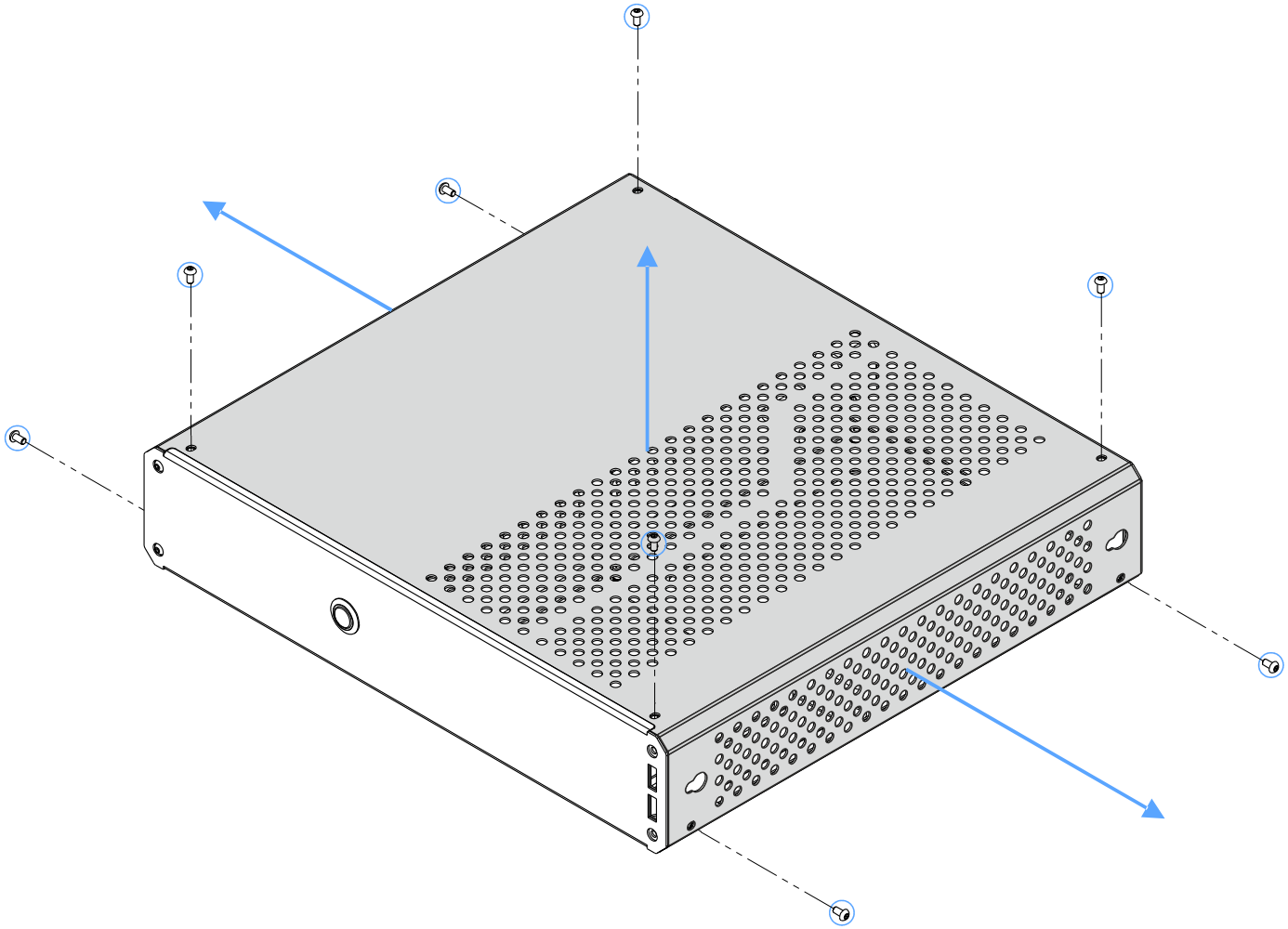

Case disassembly

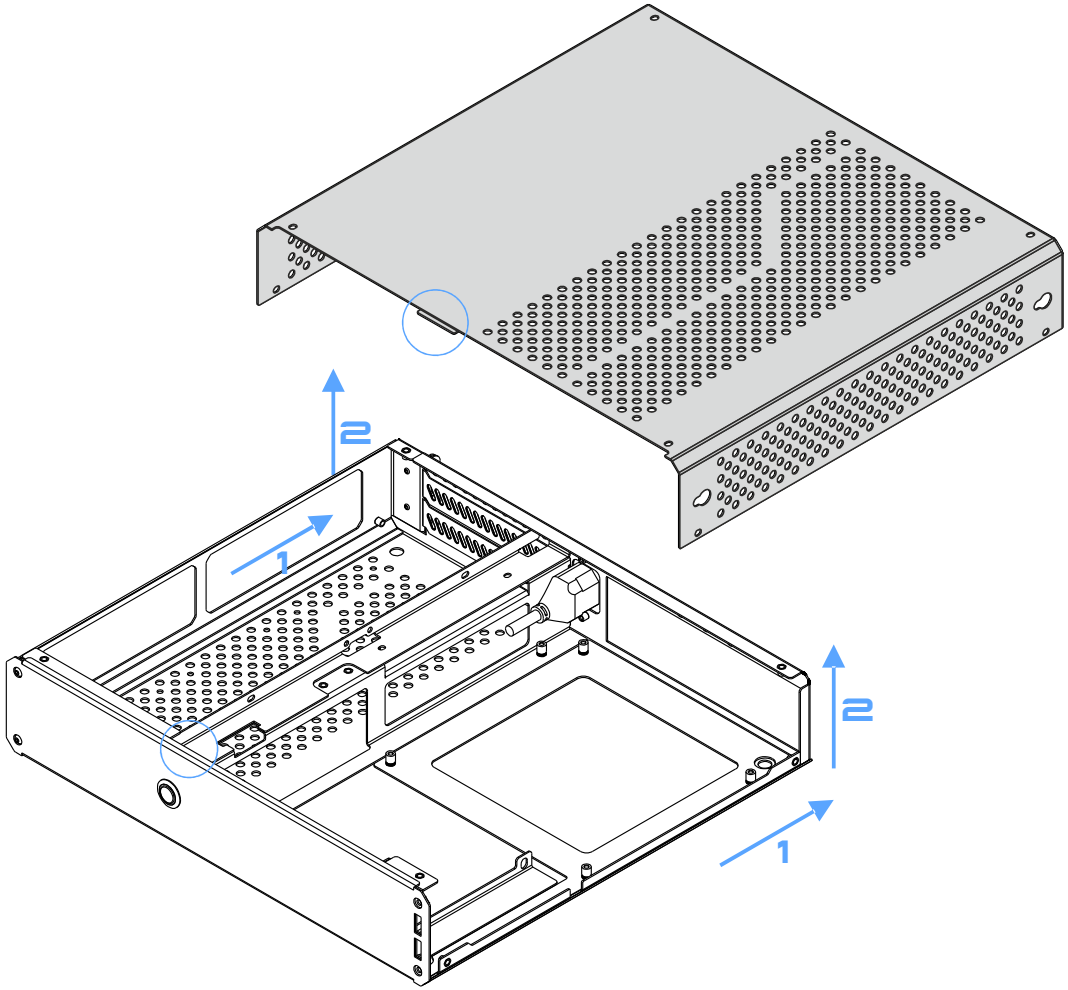
2
1
2
1

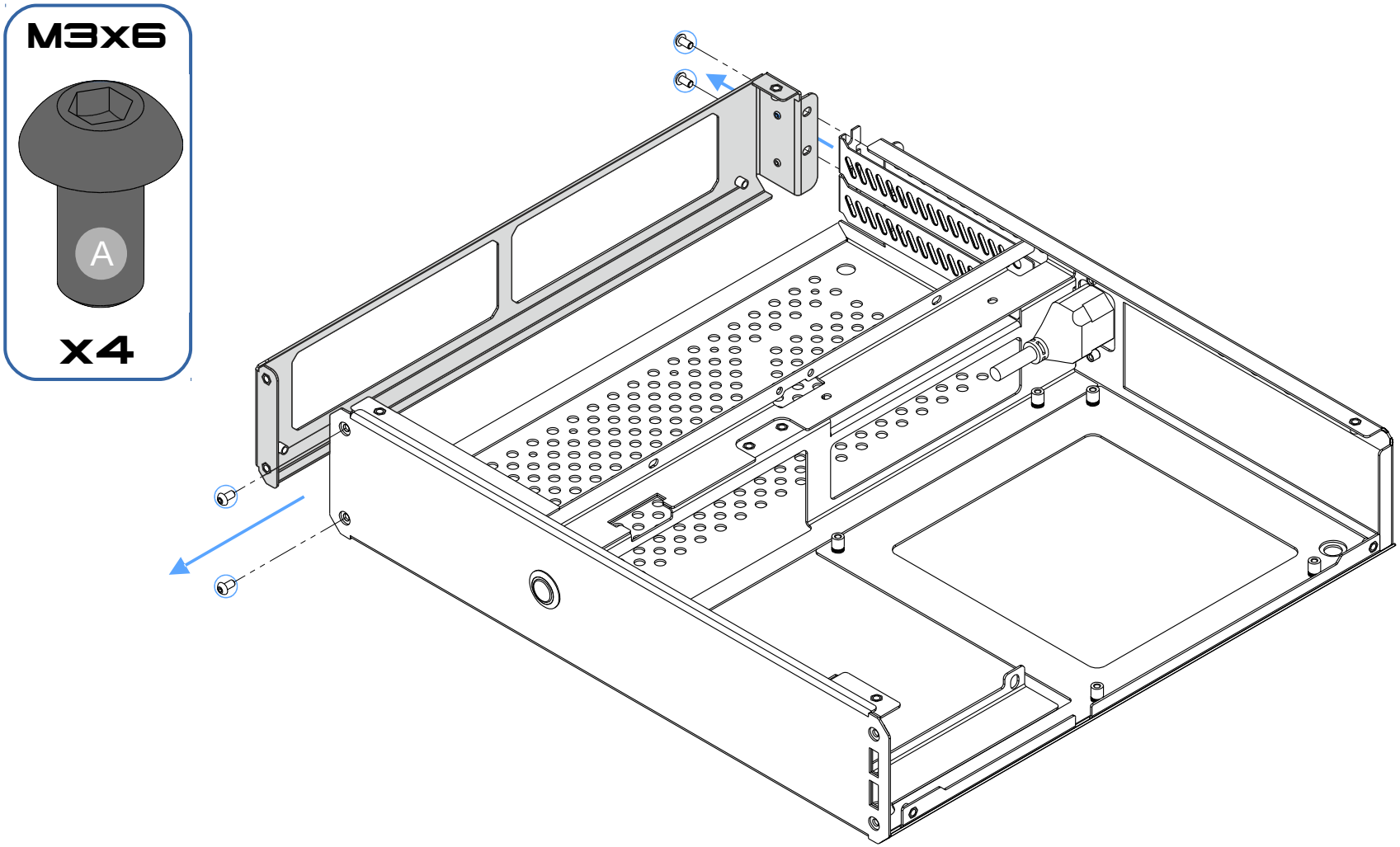

Case disassembly

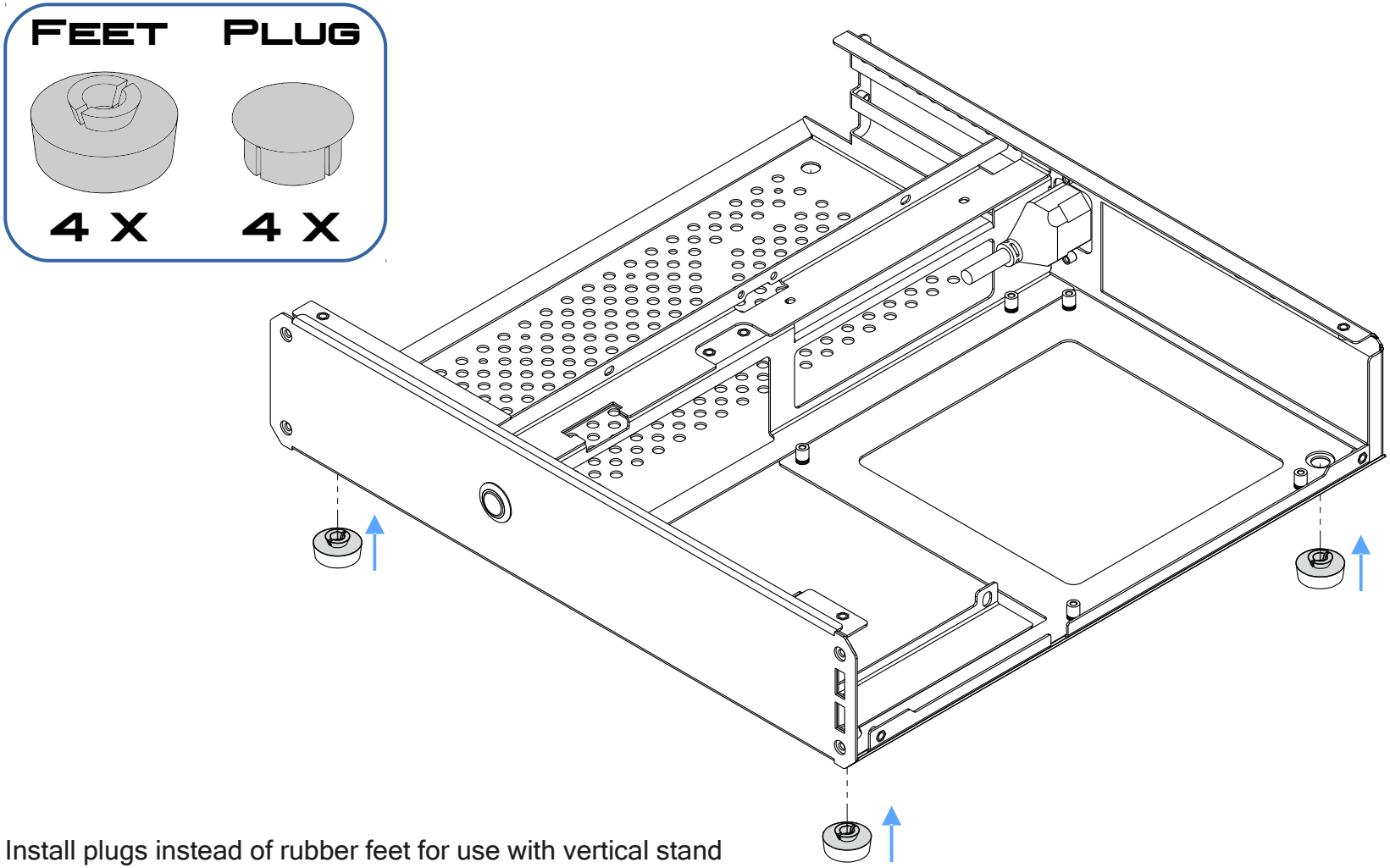

Install plugs instead of rubber feet for use with vertical stand

RUBBER FEET INSTALLATION

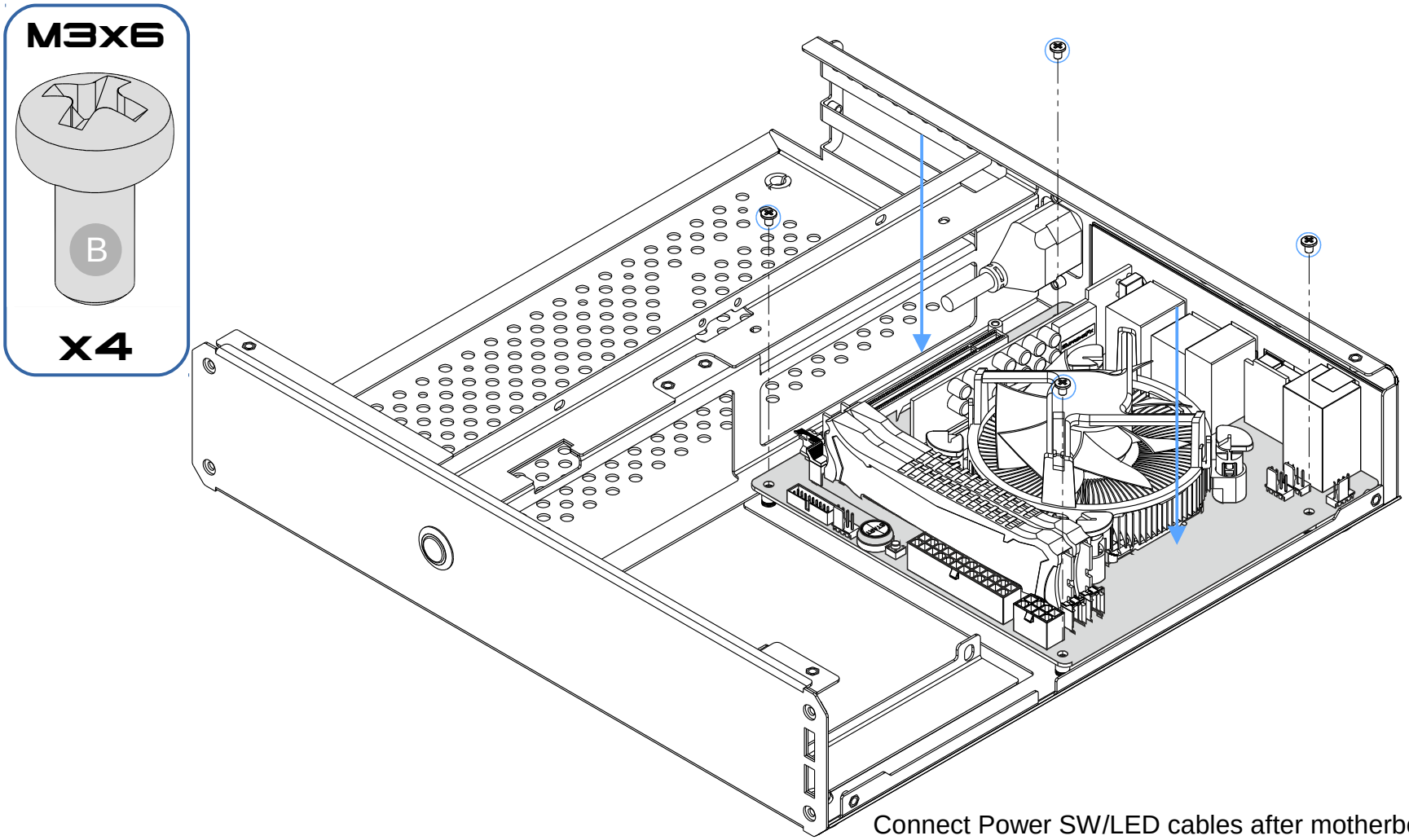

Connect Power SW/LED cables after motherboard installation

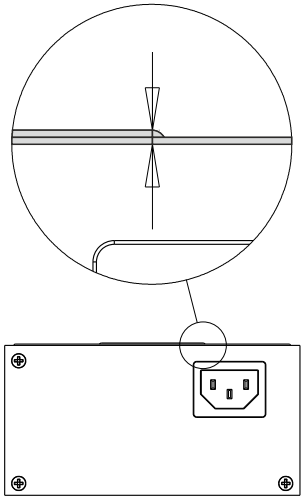

If your sfx-l power supply has a grill sticking outside the body outline this violating the sfx form factor reference, please rotate the grill facing inward.

Make sure that grill logo plate doesn't touch the fan, otherwise remove it or replace with generic grill.

DO NOT OPEN THE POWER SUPPLY BODY!
DOING SO WILL VOID YOUR PSU WARRANTY!

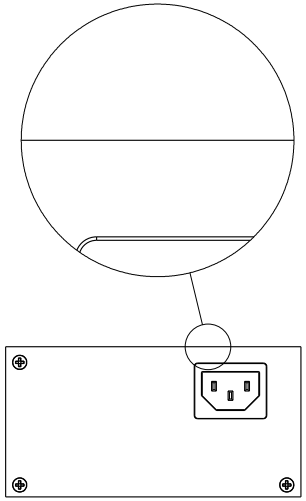

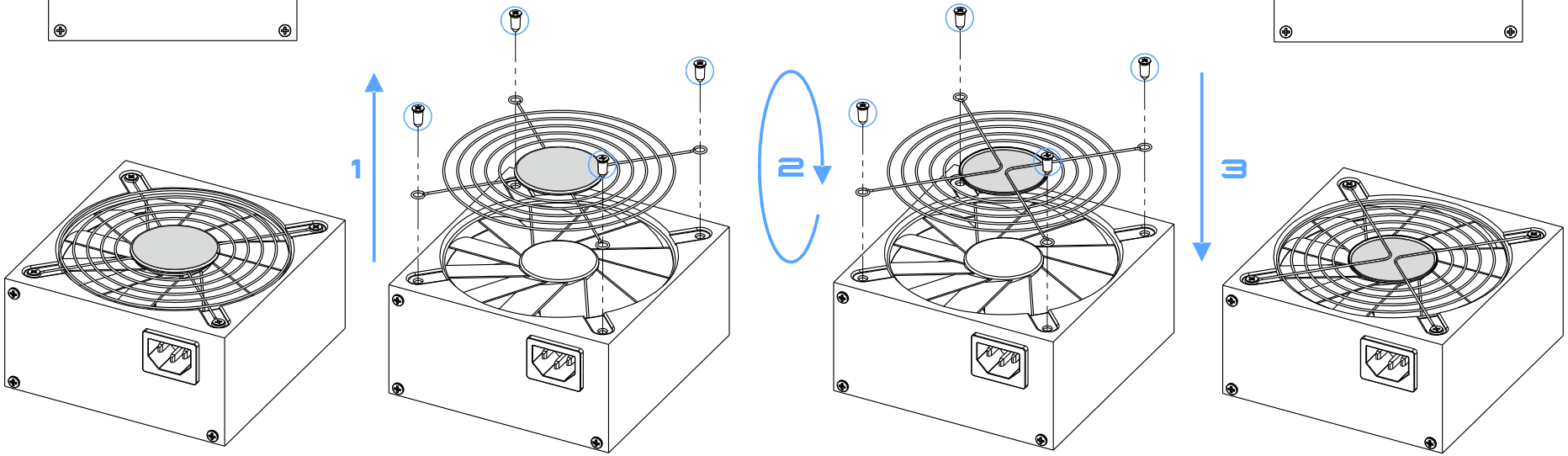

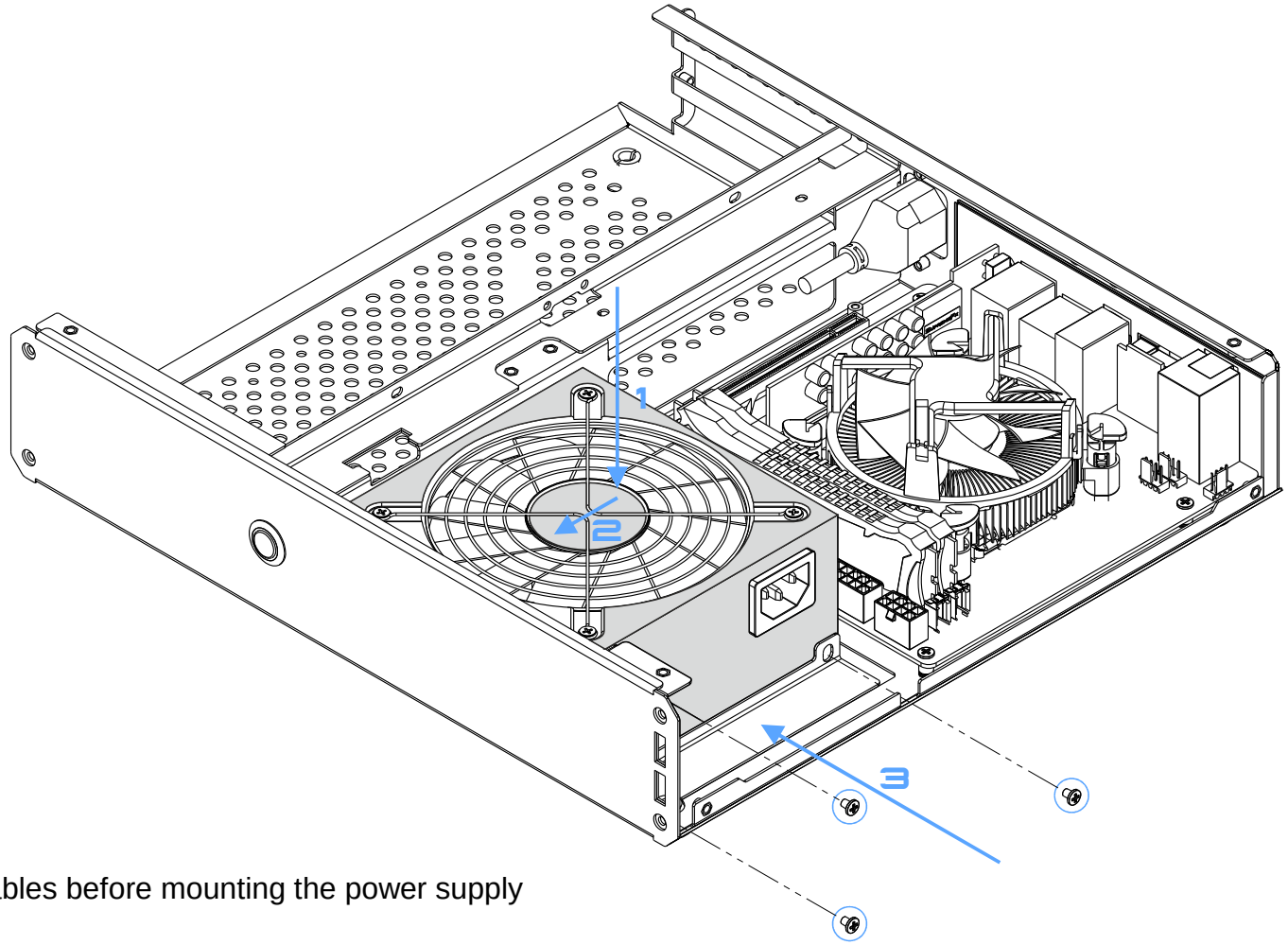

Connect modular cables before mounting the power supply

Dedicated screws should be bundled with SFX power supply (M3 or M3.5)

Riser is held tightly by its plastic slot body rather than screwing the PCB to the chassis. This way delicate connection between the slot and the pcb is safe even when mounting big and heavy open air cooled cards.

Screws are used to tighten the grasp of metal on the riser's pci slot body and do not go through the holes in the pcb but lock its movement in front of it. This way multiple models of riser may be used regardless of the screw location.

You may need to apply some pressure on the bottom part of riser holding slot to acheive clearance required to slide the riser in.

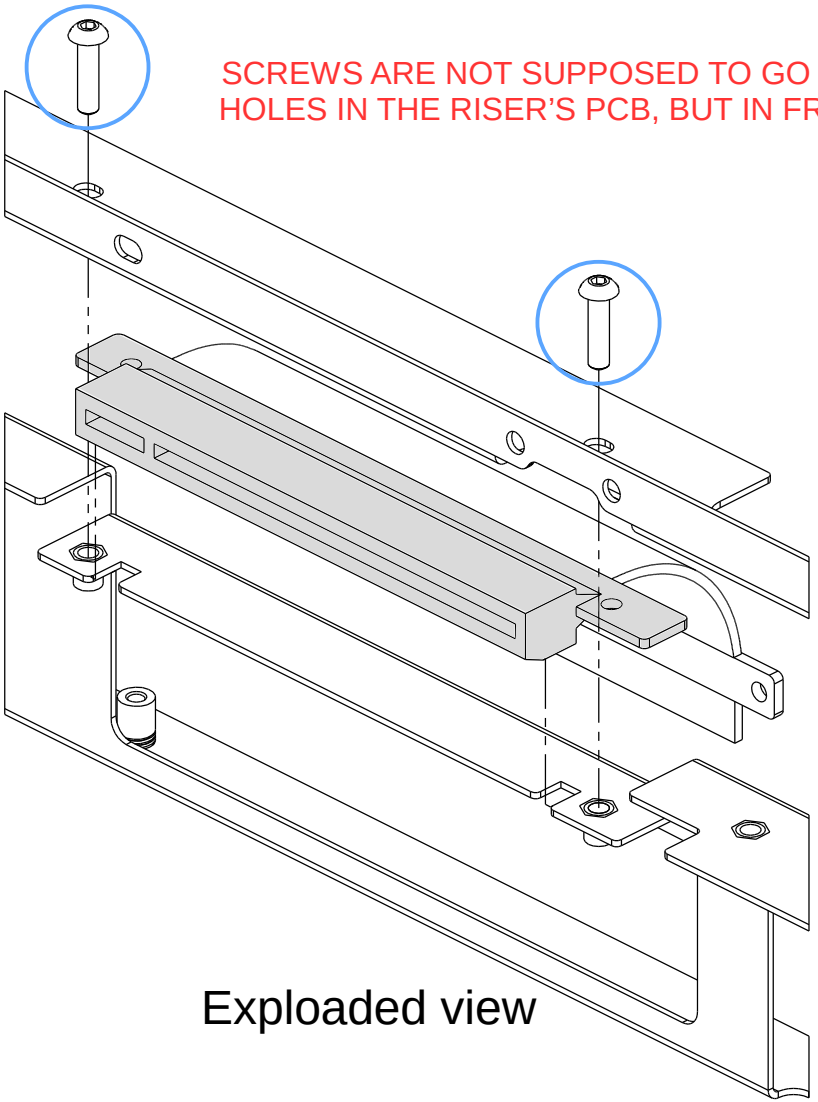

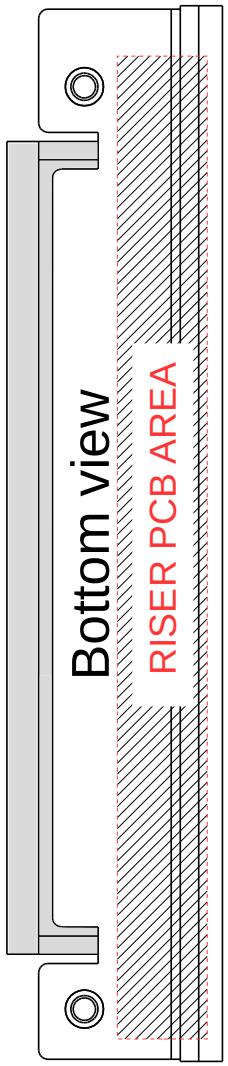

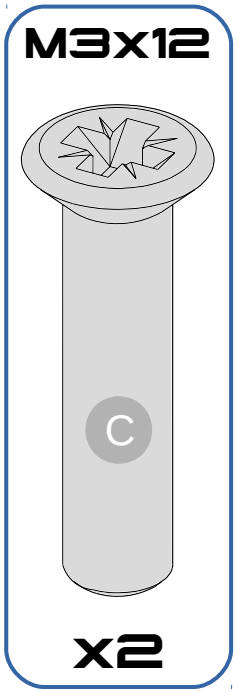

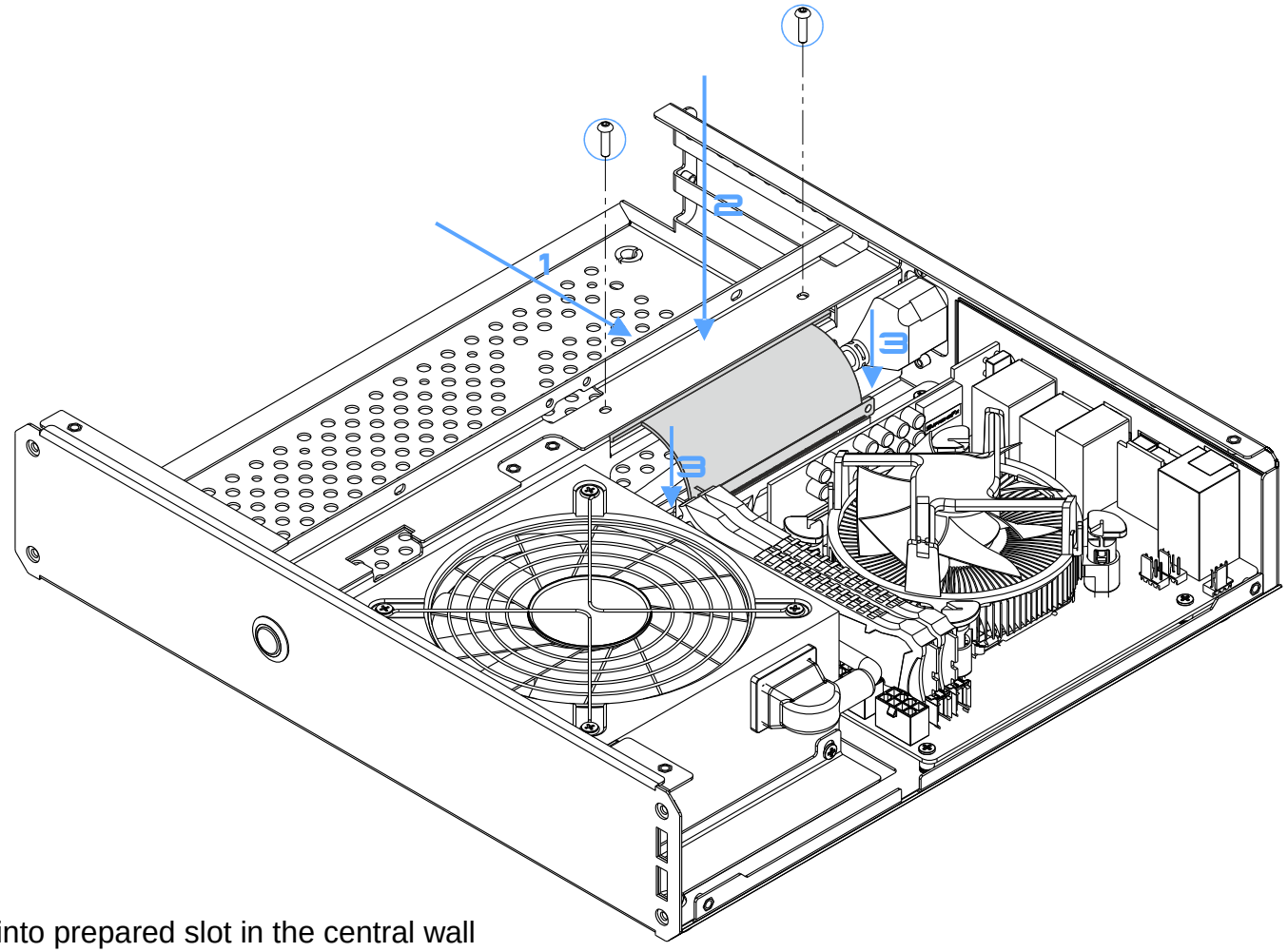

Slide the pci-e riser into prepared slot in the central wall

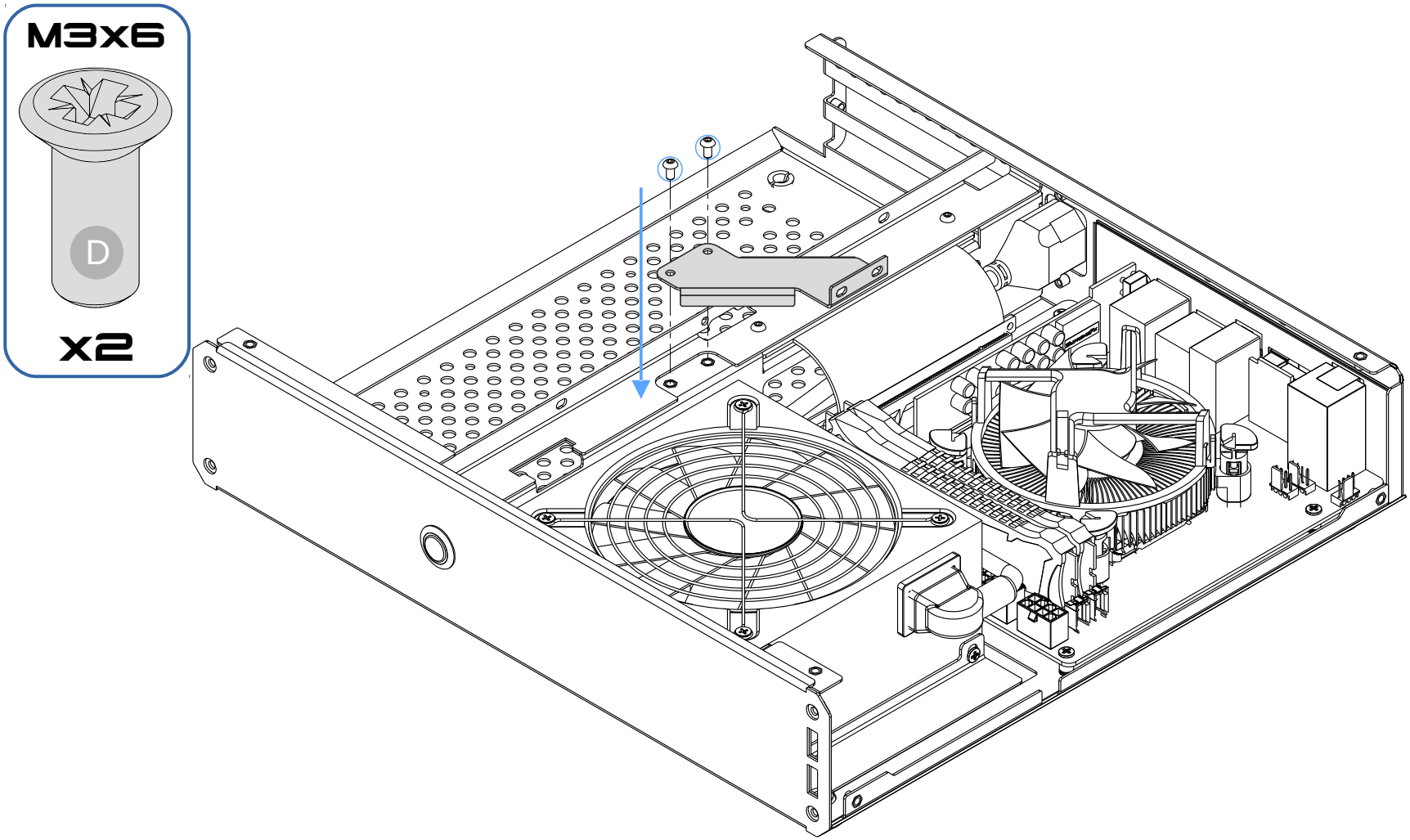

DRIVE SUPPORT INSTALLATION

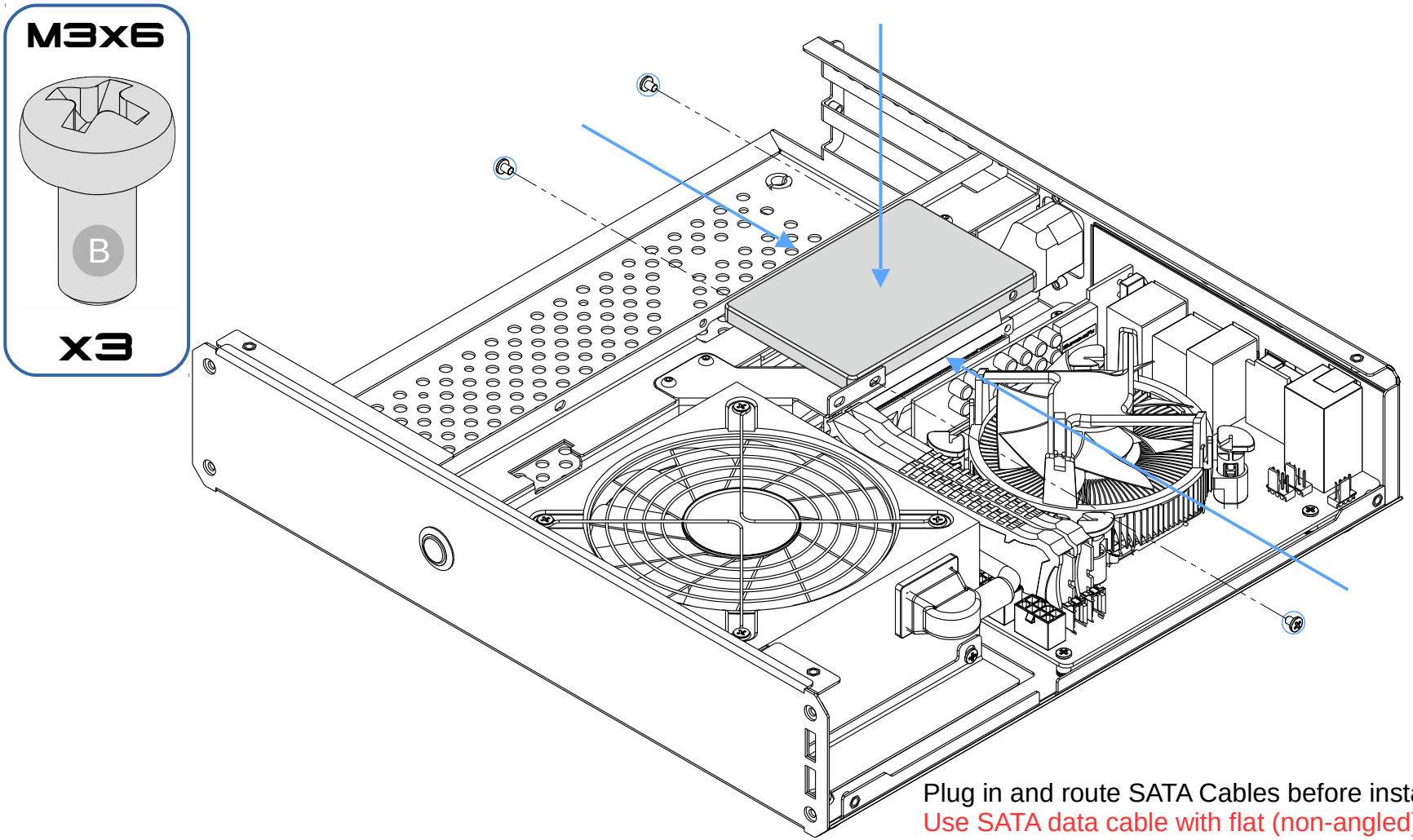

Plug in and route SATA Cables before installing 2.5" Drive
Use SATA data cable with flat (non-angled) connectors

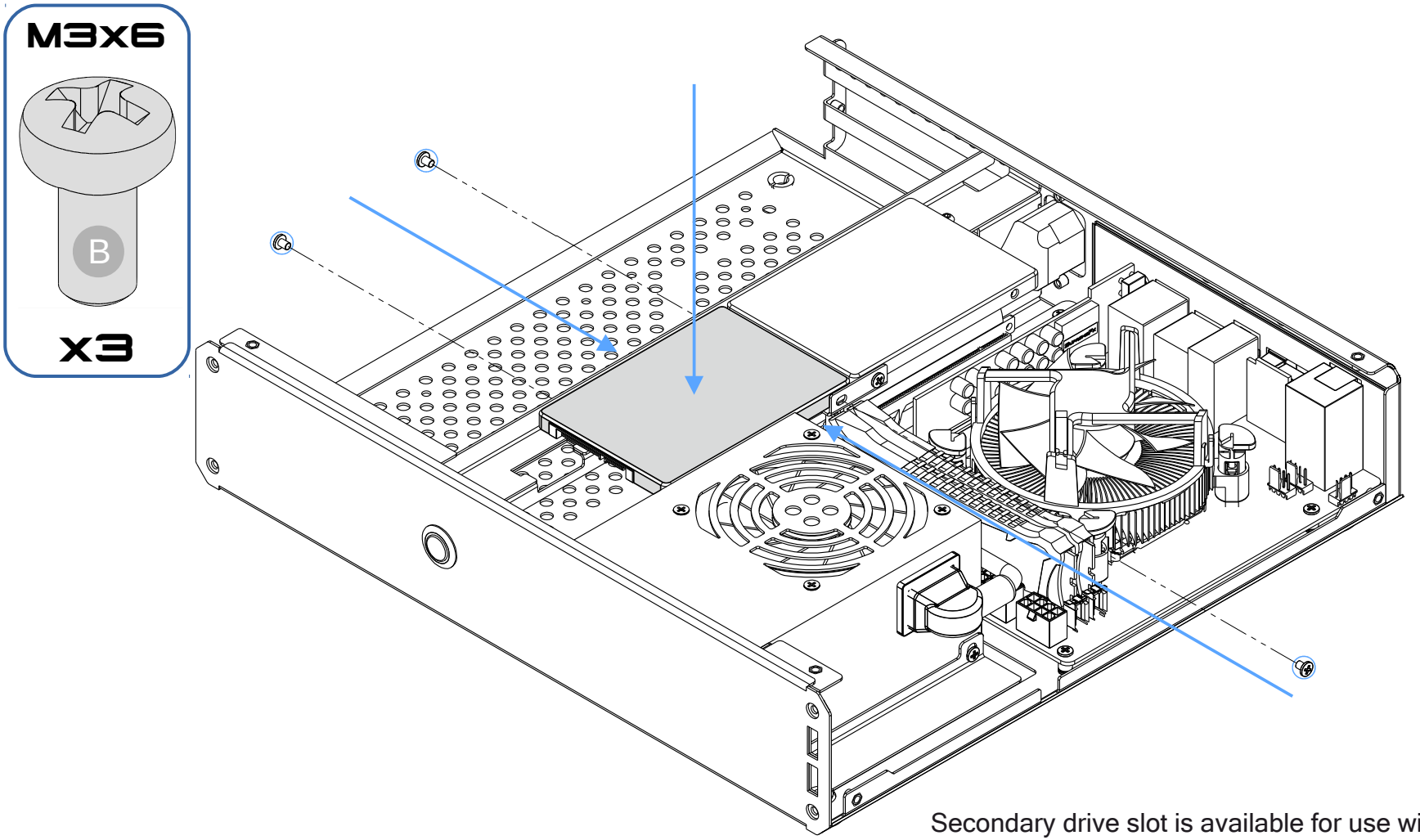

Secondary drive slot is available for use with 100mm SFX

2.5" Drives installation

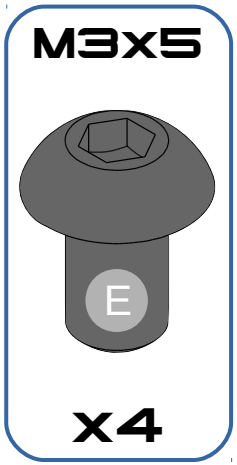

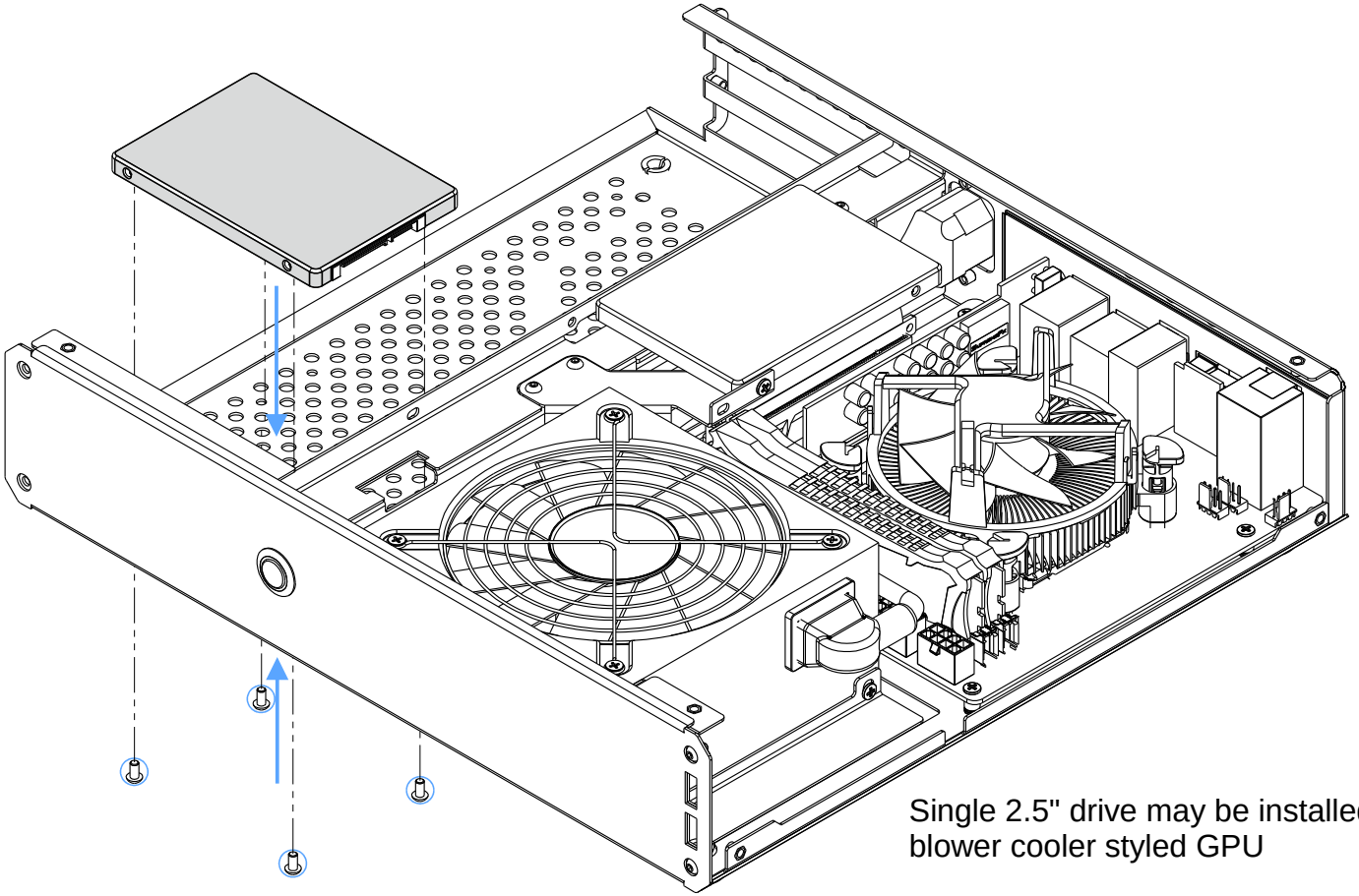

Single 2.5" drive may be installed under reference blower cooler styled GPU

Use SATA cables with flat (non-angled) connectors

2.5" Drives installation

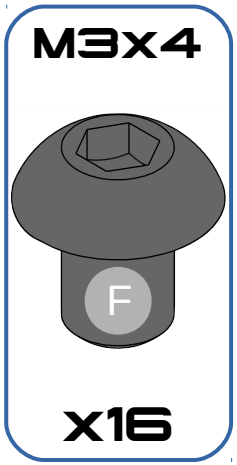

2.5" can be stacked with quad drive brackets and installed in VGA compartment for NAS configurations or with short 200mm card

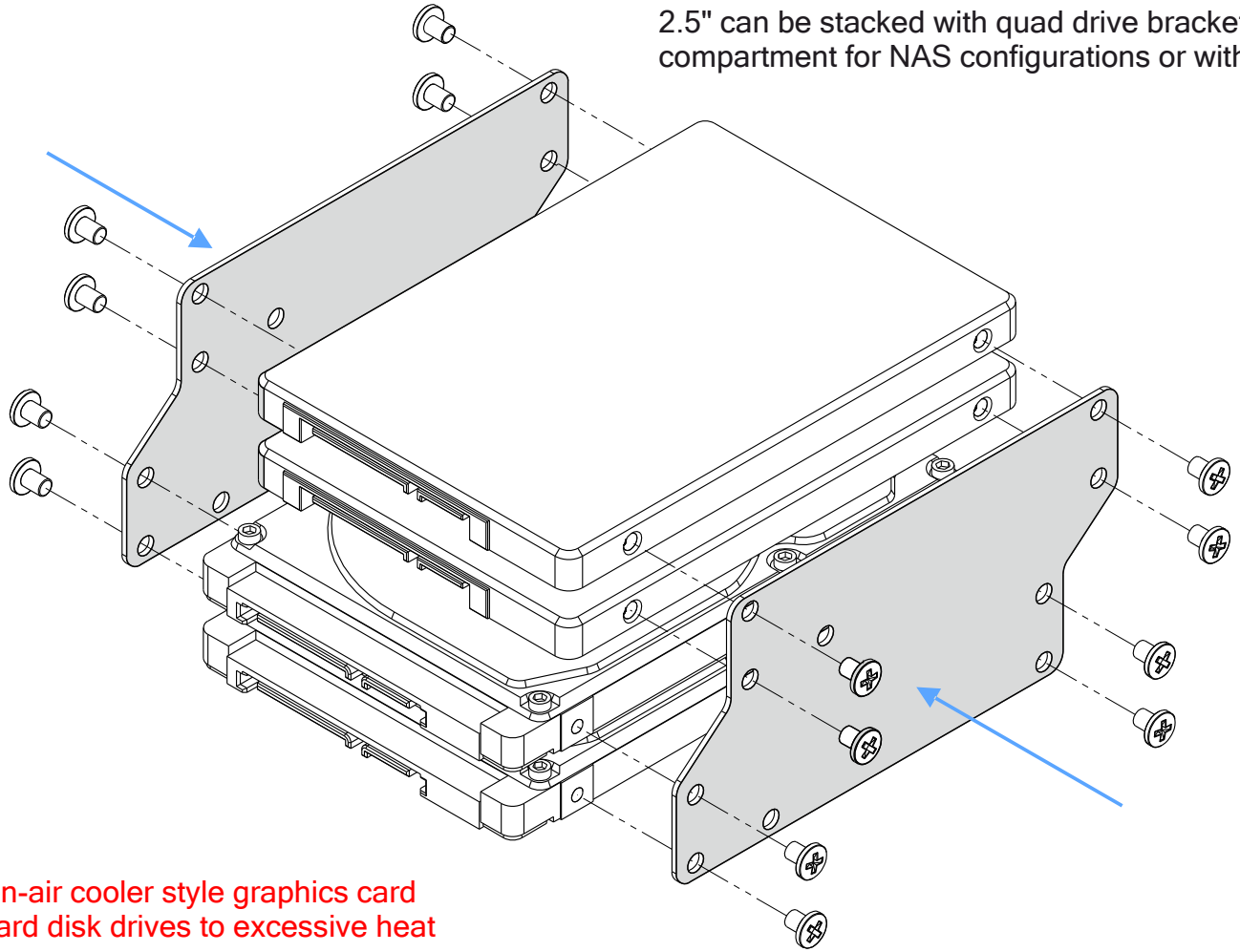

Running high-end, open-air cooler style graphics card may expose stacked hard disk drives to excessive heat

2.5" Drive Package Assembly

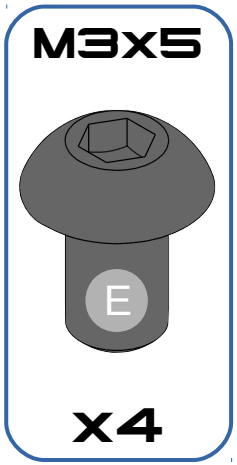

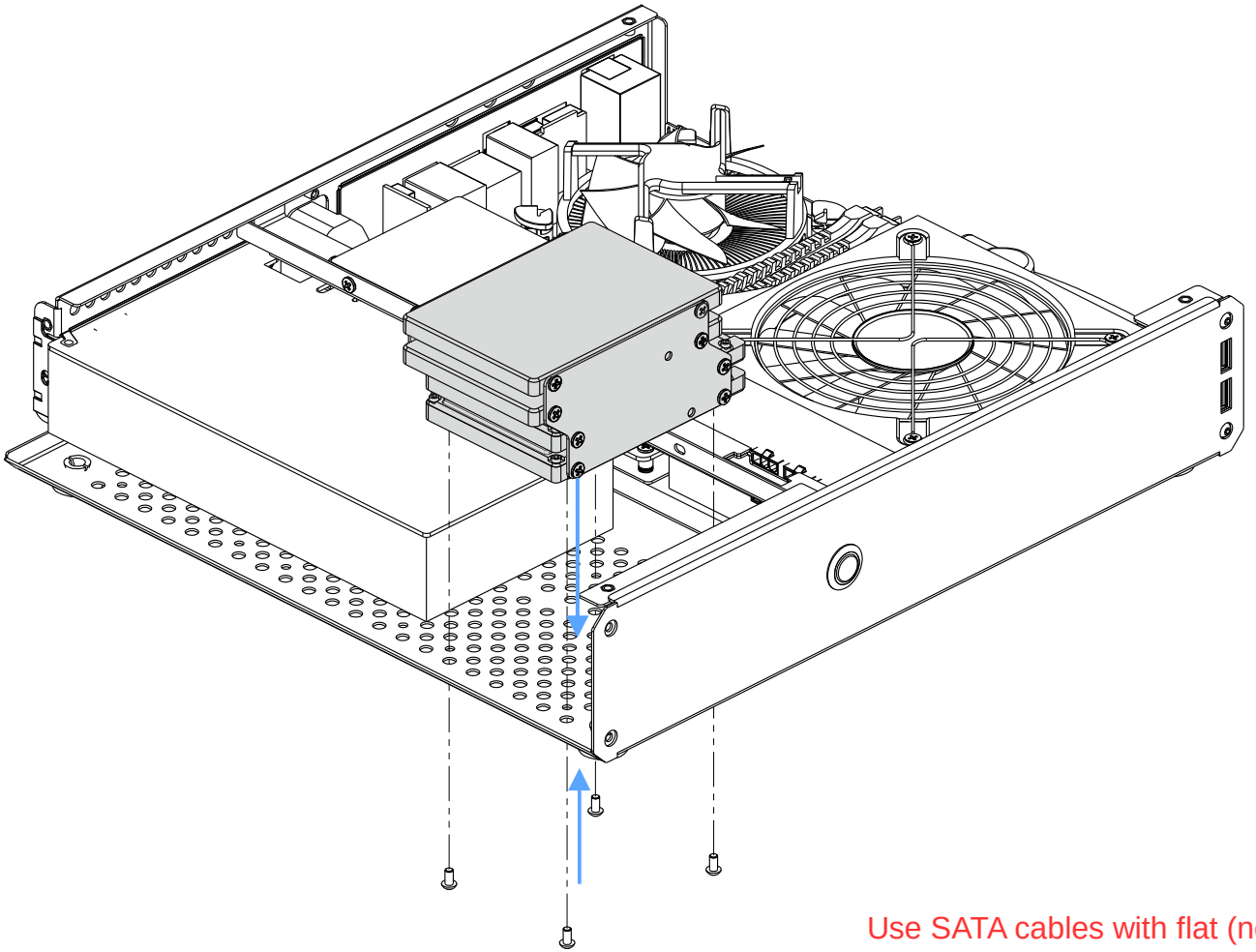

Use SATA cables with flat (non-angled) connectors

2.5" Drive Package Installation

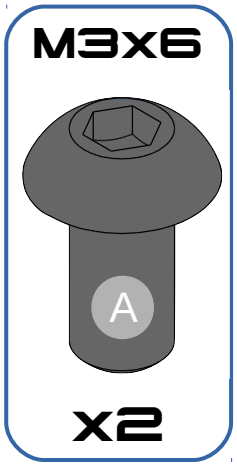

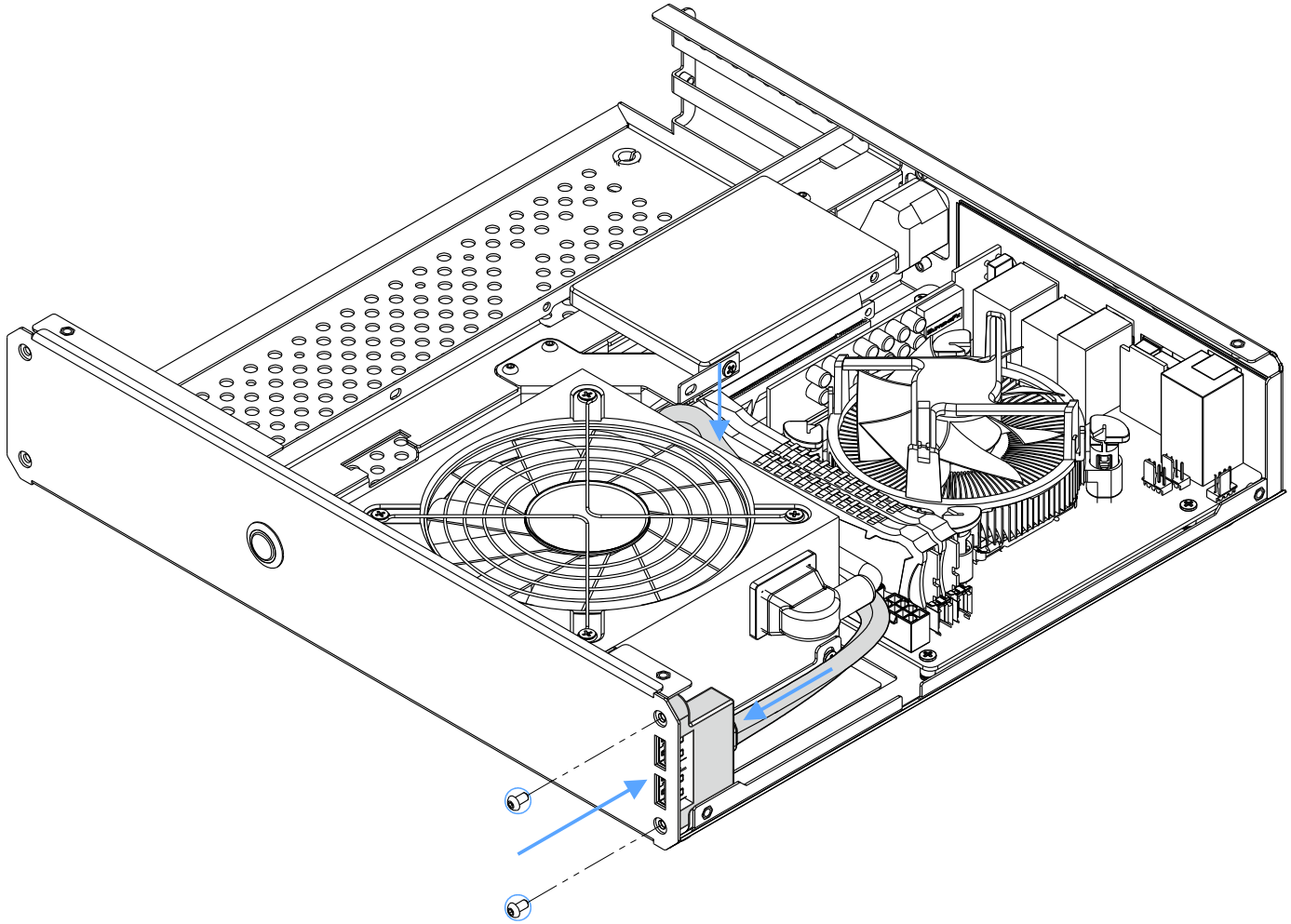

USB 3.0 FRONT PANEL INSTALLATION

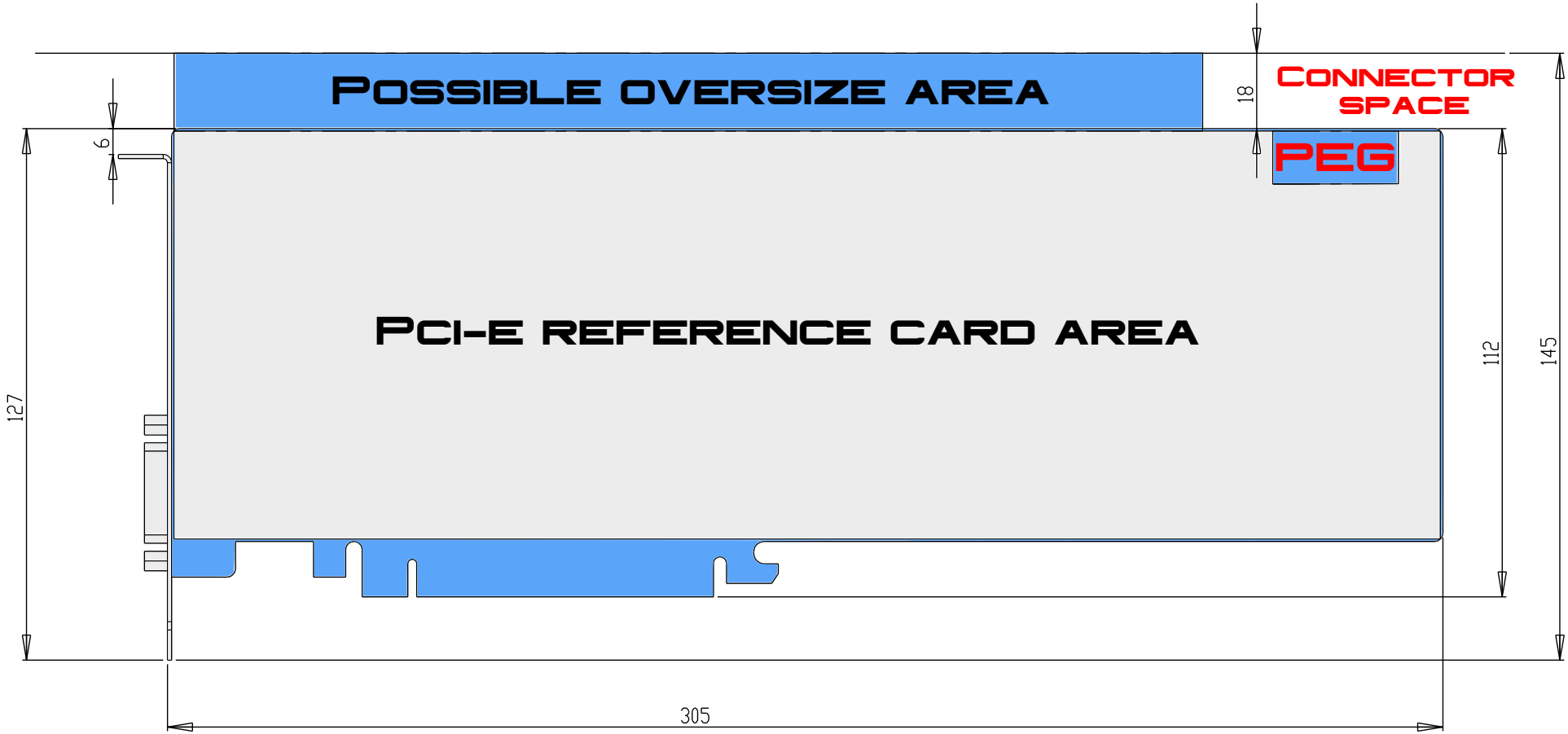
Possible oversize area
Connector space
PEG
PCI-E reference card area
6
18
127
112
145
305

Arrange the routed power cables between the gpu and center wall

Install gpu into pci-e riser slot

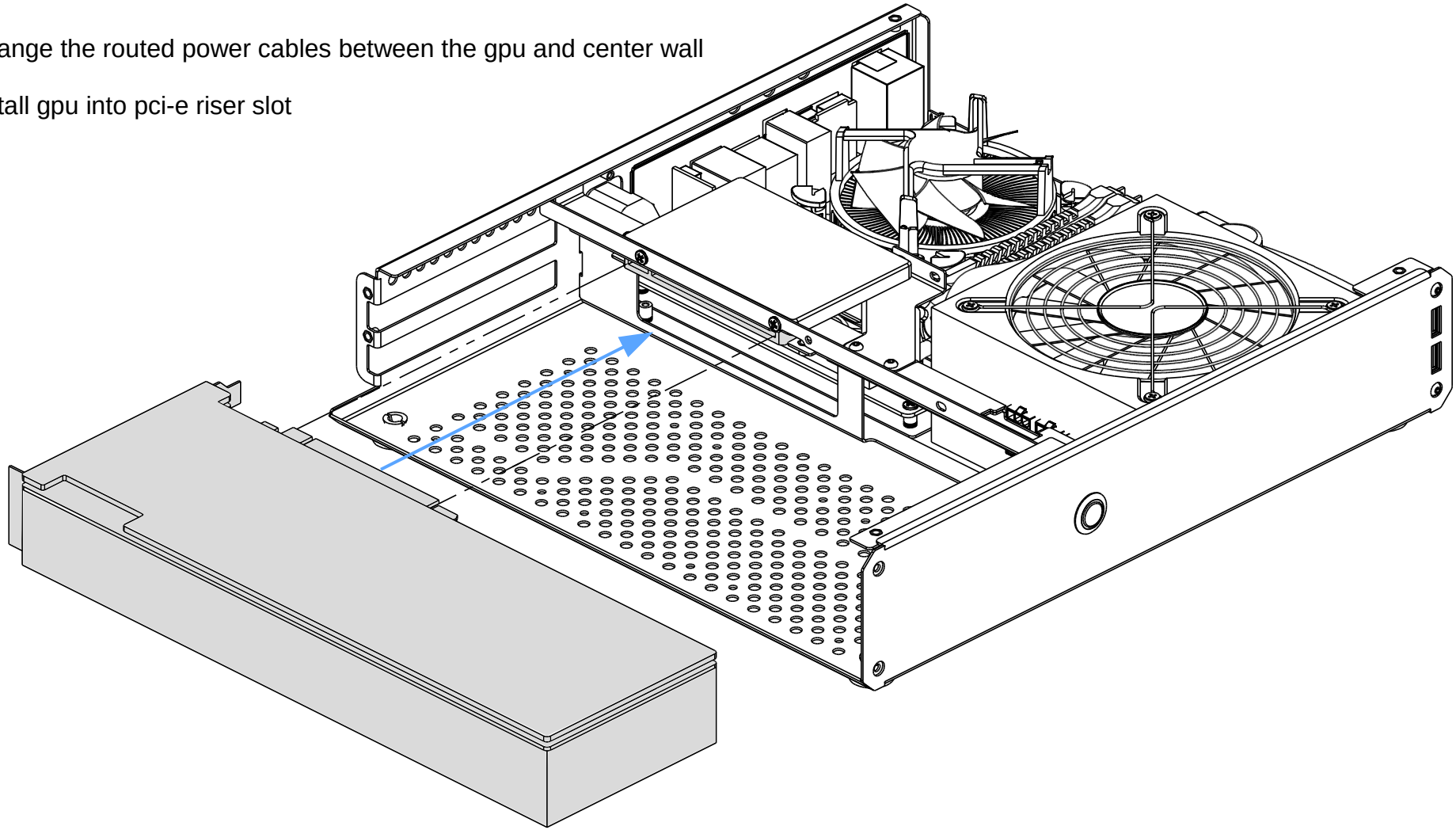

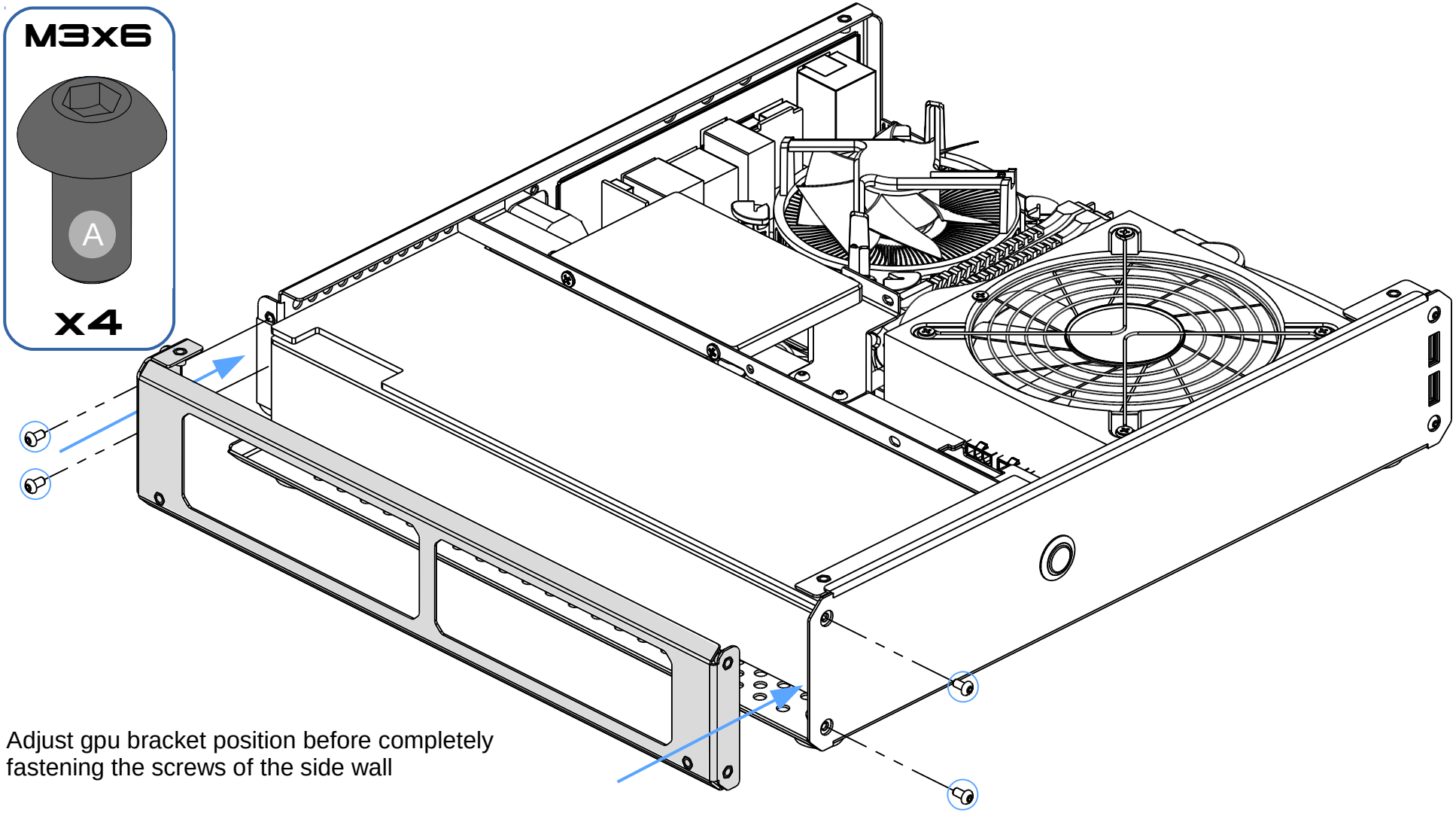

Adjust gpu bracket position before completely fastening the screws of the side wall

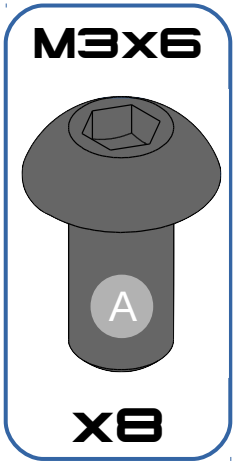

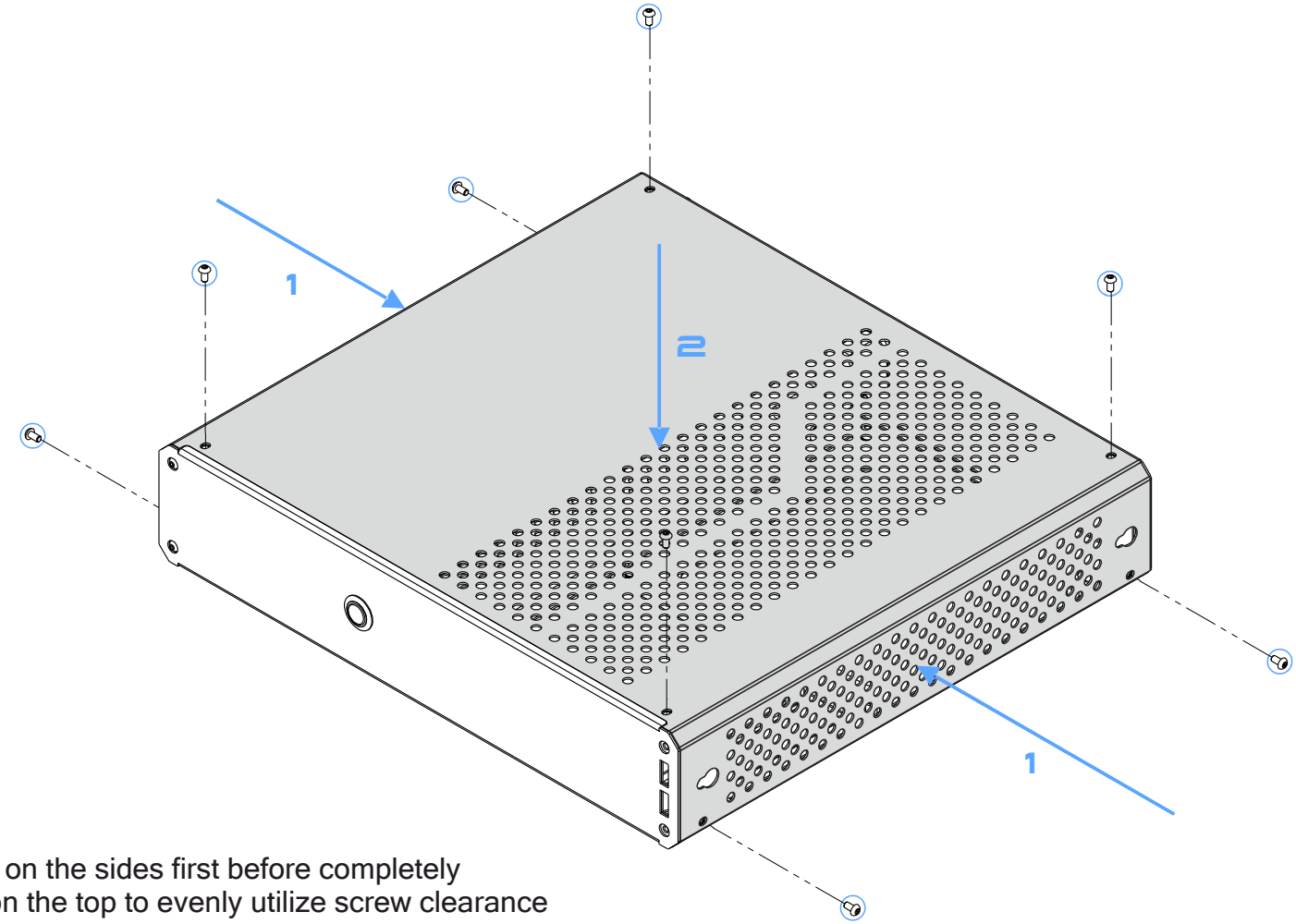

Fasten the screws on the sides first before completely fastening screws on the top to evenly utilize screw clearance

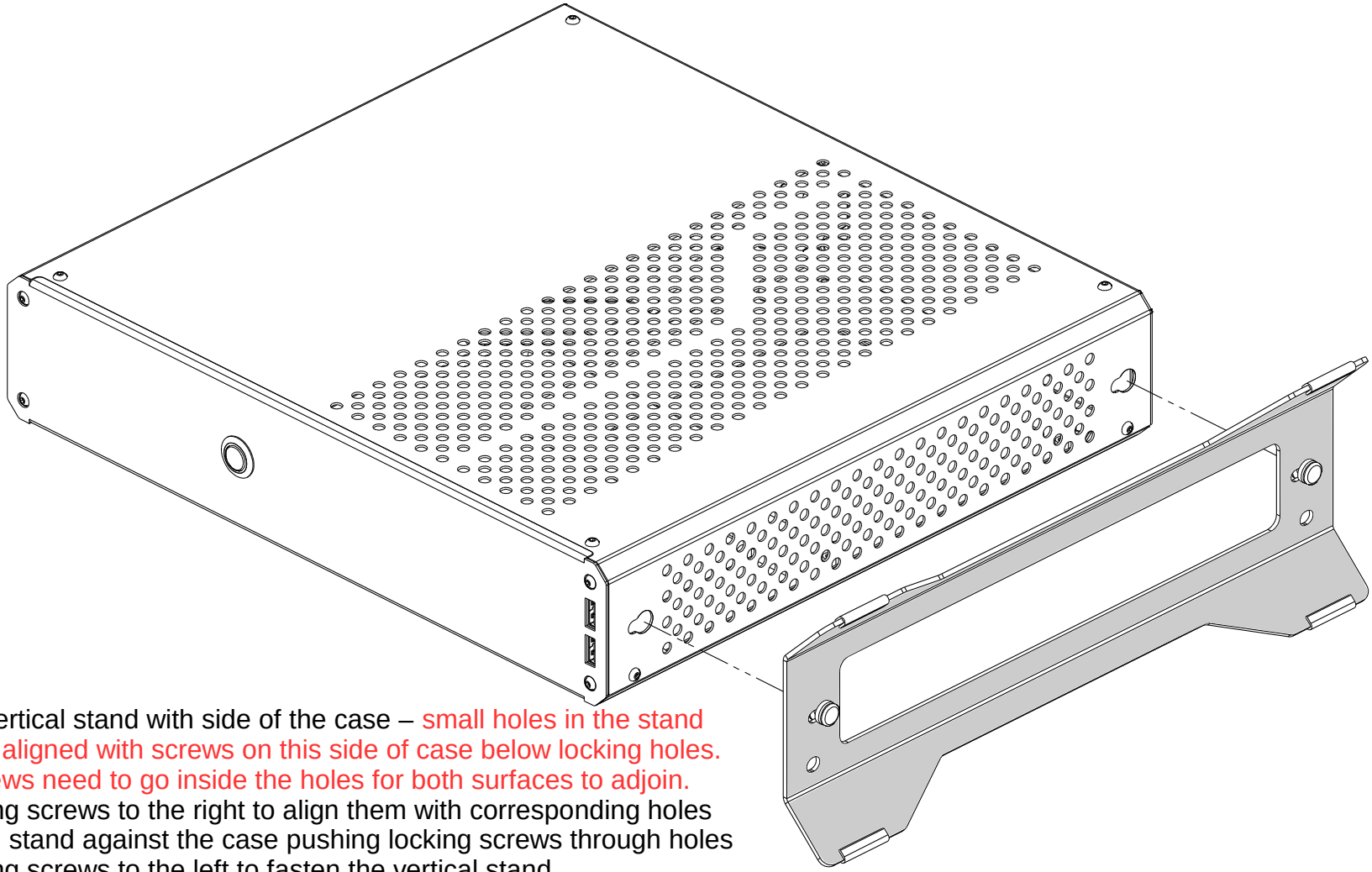

Align the vertical stand with side of the case – small holes in the stand have to be aligned with screws on this side of case below locking holes. Those screws need to go inside the holes for both surfaces to adjoin.
Slide locking screws to the right to align them with corresponding holes
Put vertical stand against the case pushing locking screws through holes
Slide locking screws to the left to fasten the vertical stand.

VERTICAL STAND INSTALLATION

Case may be wall mounted or installed under the desk in a fixed position BEFORE assembling the computer.

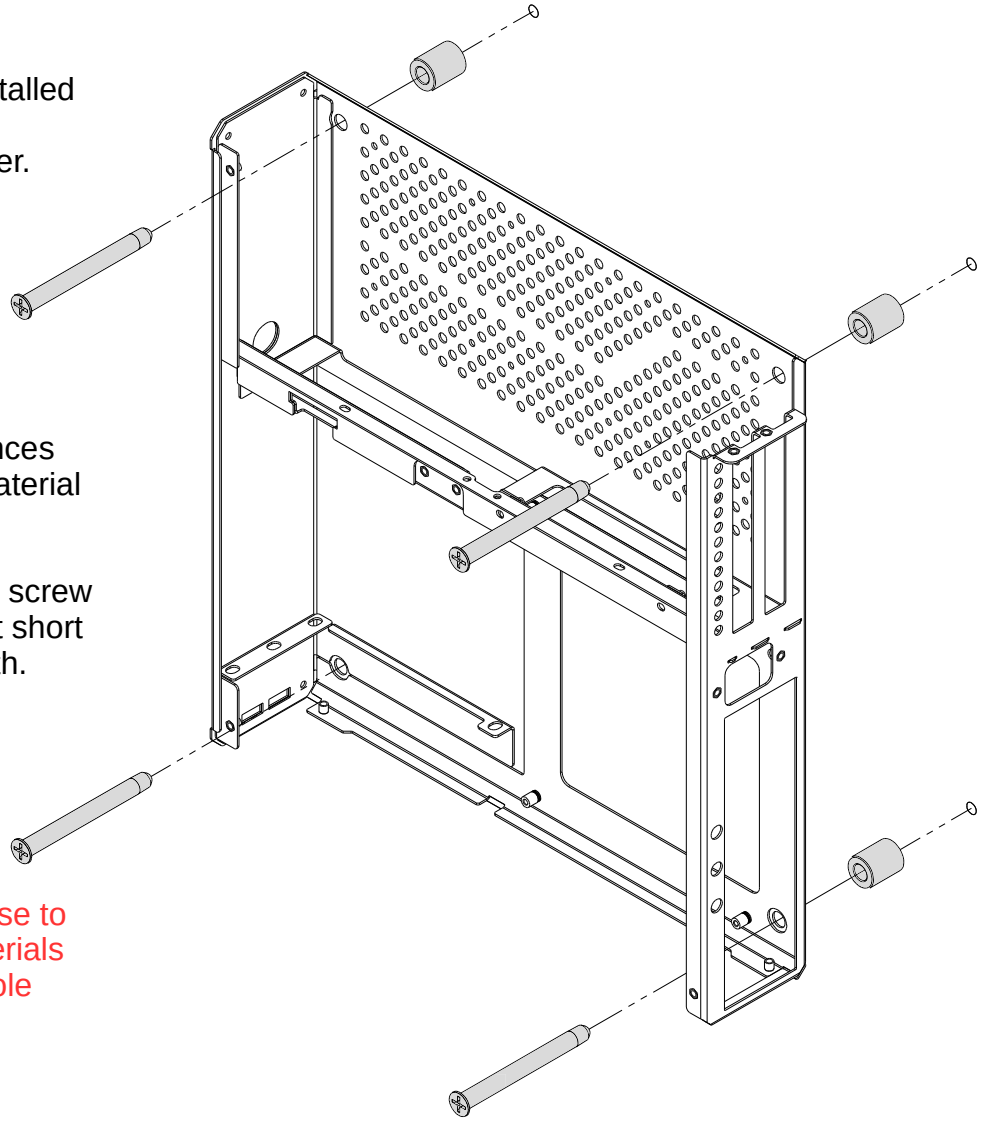

You will need to use proper distances and screws appropriate for the material of your wall or desk.

Make sure to insulate head of the screw under the motherboard to prevent short circuiting the board pin underneath.

Be carefull when attaching the case to drywall or chipboard – those materials may not sustain the weight of whole computer.

DR ZABER SENTRY

HTTP://ZABER.COM.PL/SENTRY/MANUAL.PDF

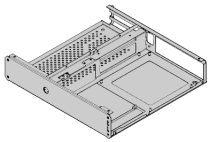

1 X

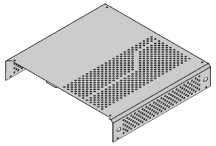

1 X

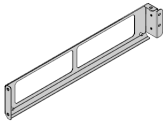

1 X

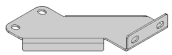

1 X

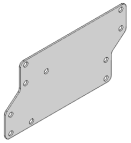

2 X

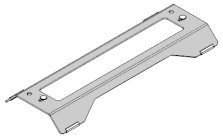

1 X

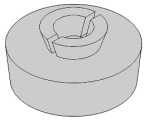

4 X

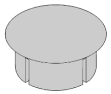

4 X

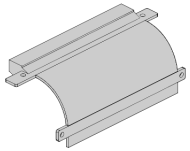

1 X

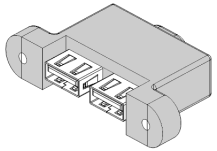

1 X

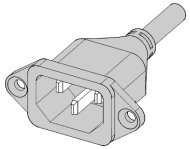

1 X

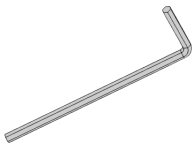

1 X

M3X6 M3X6 M3X12 M3X6 M3X5 M3X4

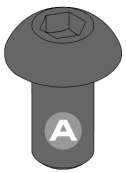

20 X

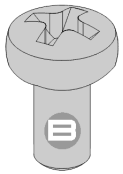

18 X

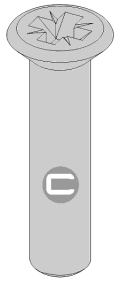

4 X

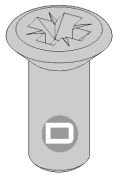

4 X

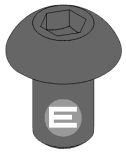

8 X

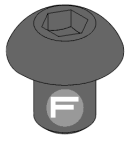

18 X

1

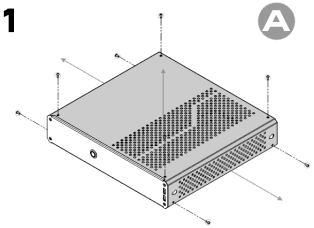

2

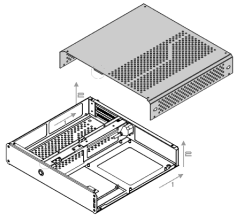

3

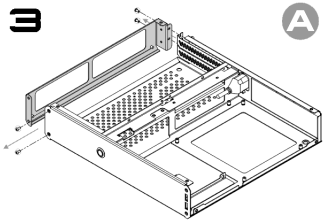

4

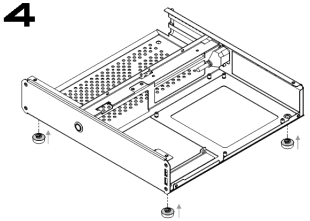

5

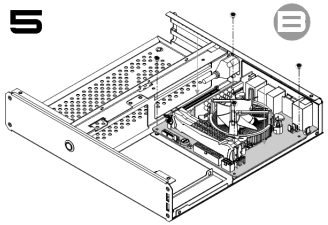

6

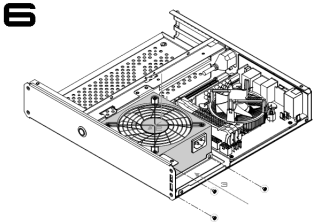

7

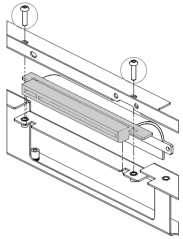

8

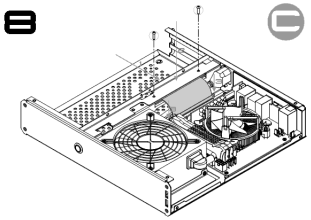

9

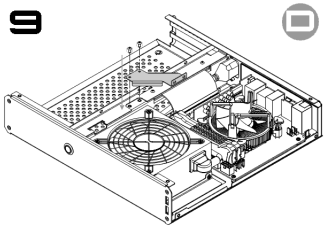

10

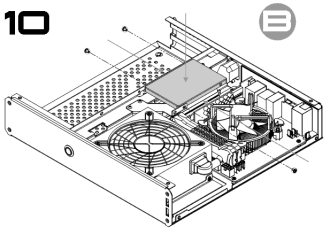

11

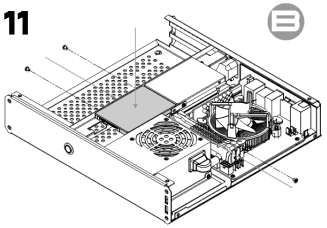

12

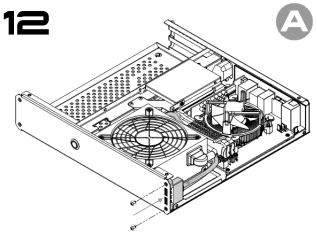

13

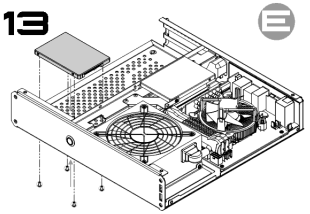

14

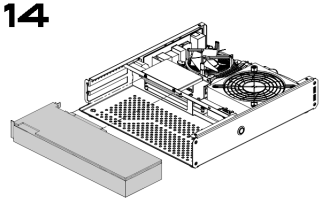

15

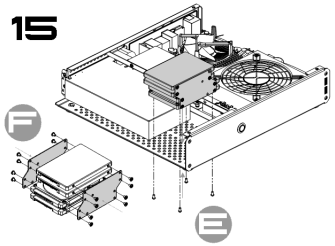

16

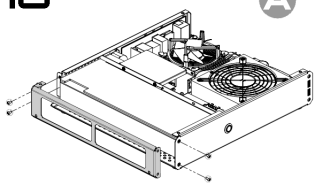

17

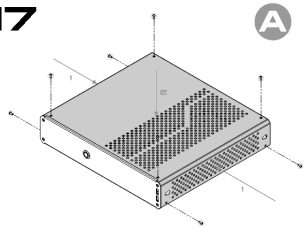

18